[Engine Compartment]

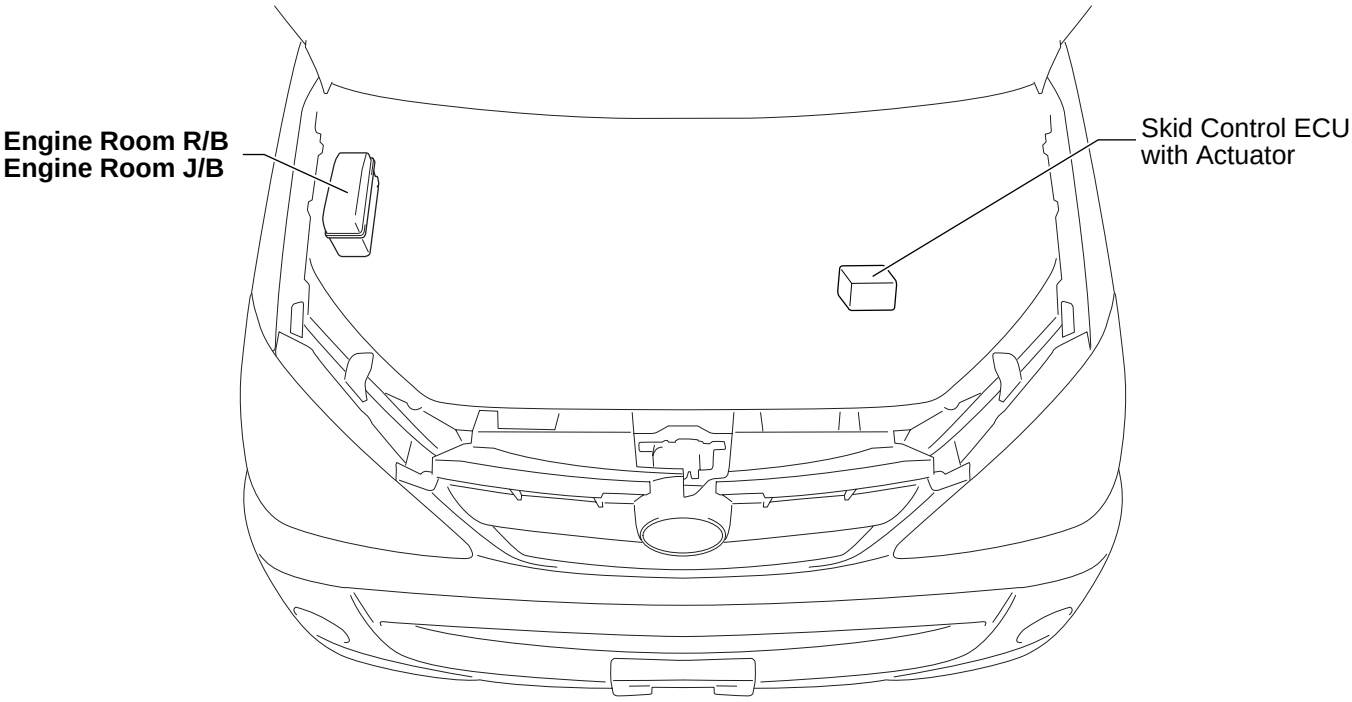

[Instrument Panel]
(LHD)

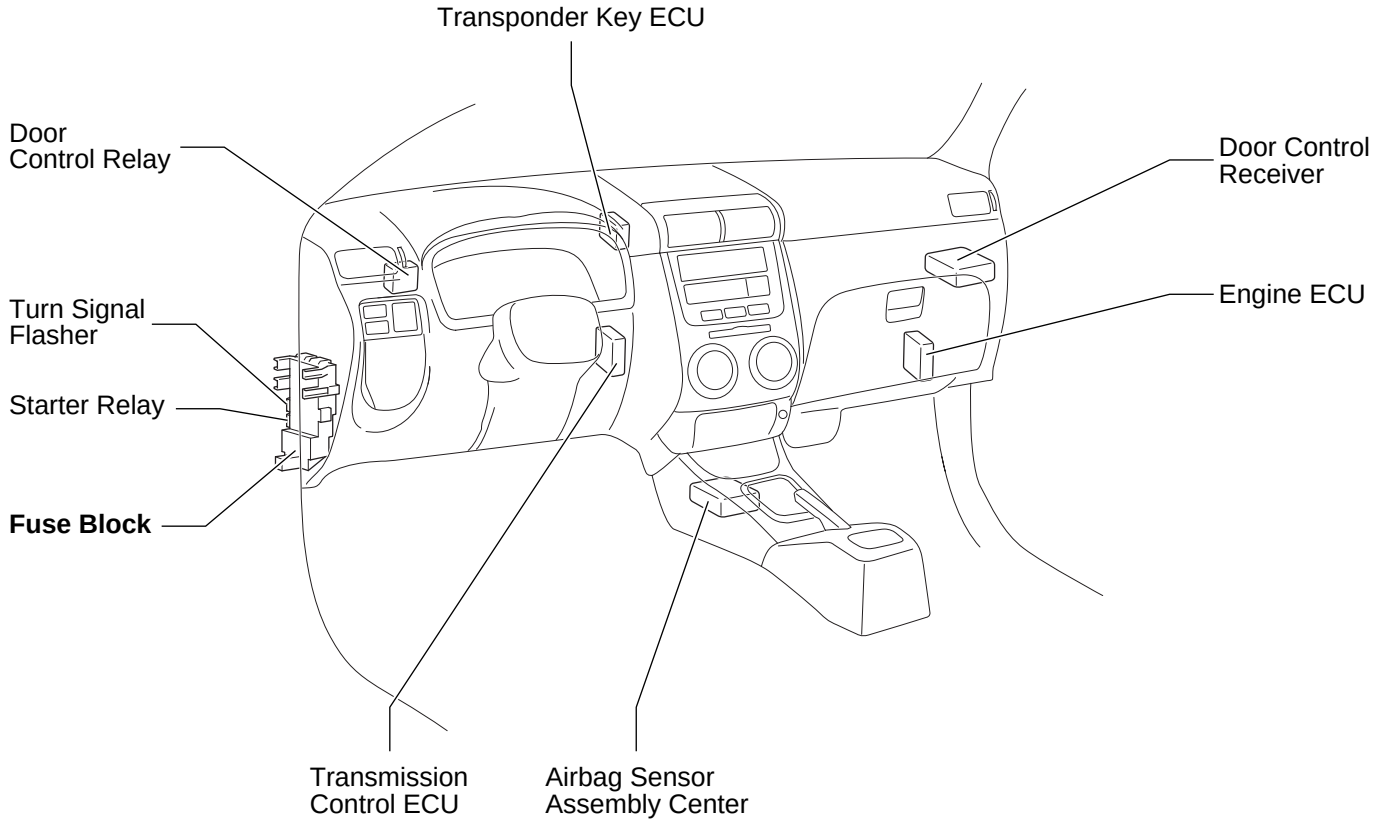

(RHD)

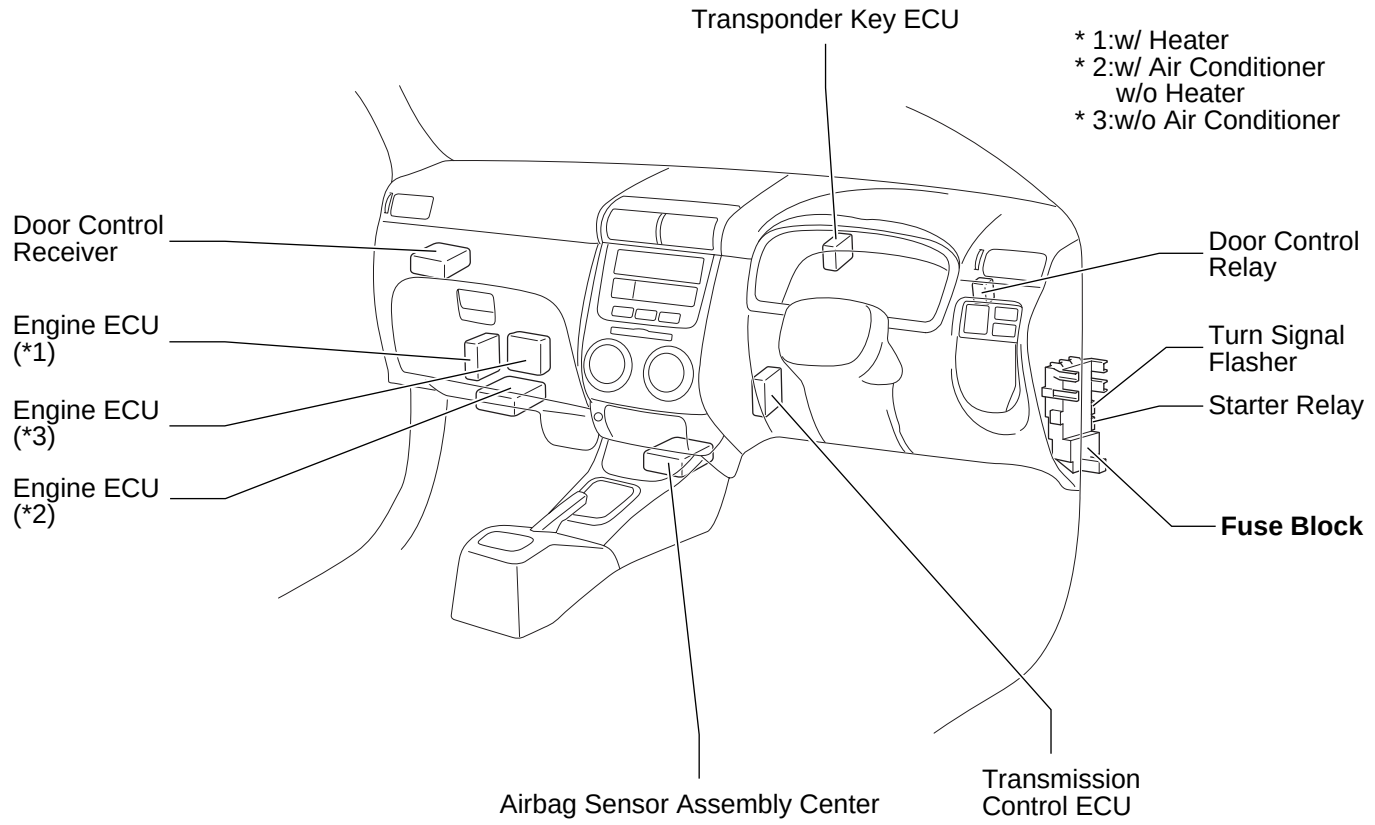

F RELAY LOCATIONS

① : Engine Room R/B	Engine Compartment Right (See Page 20)
⬭ : Engine Room J/B	

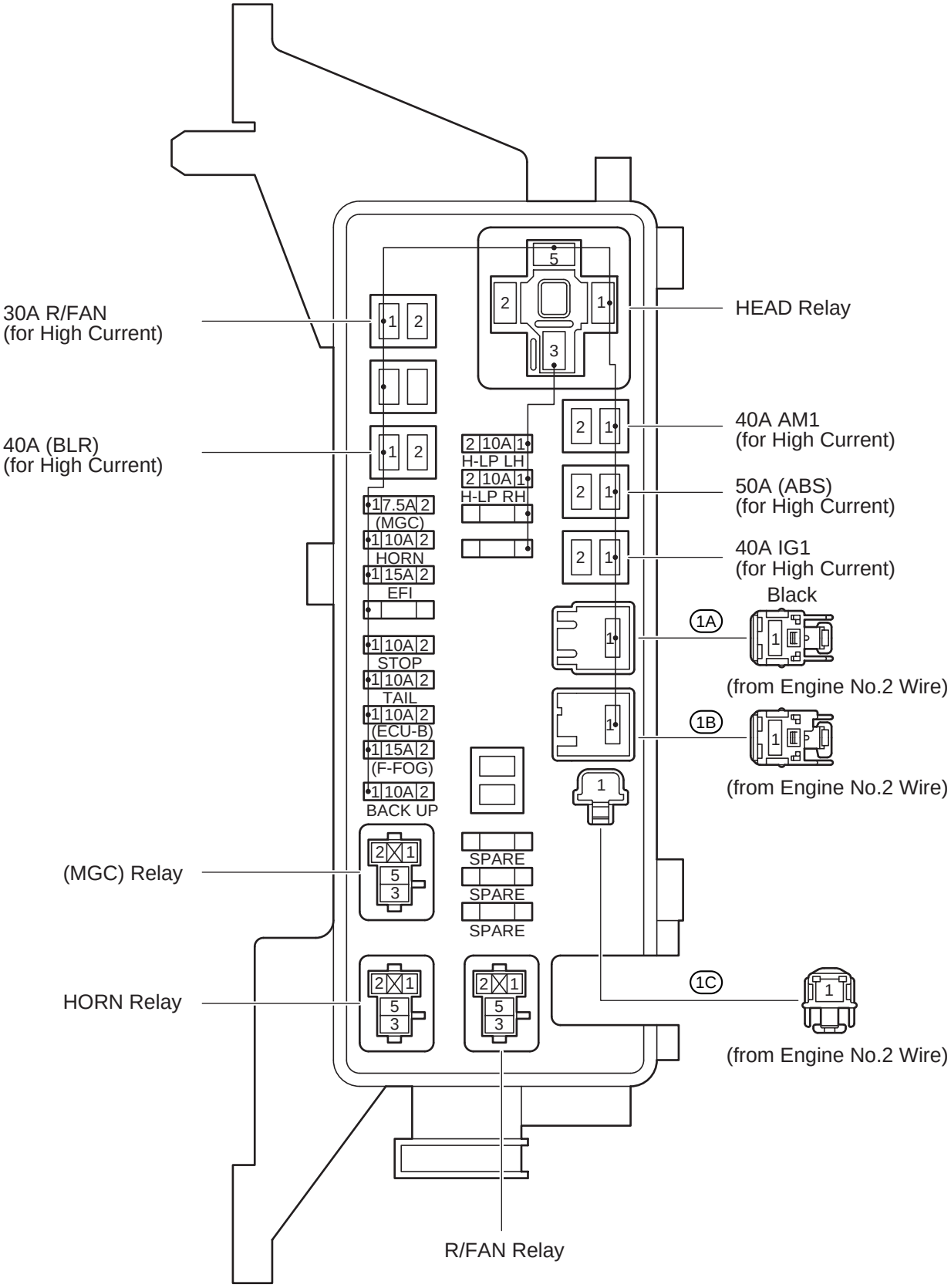
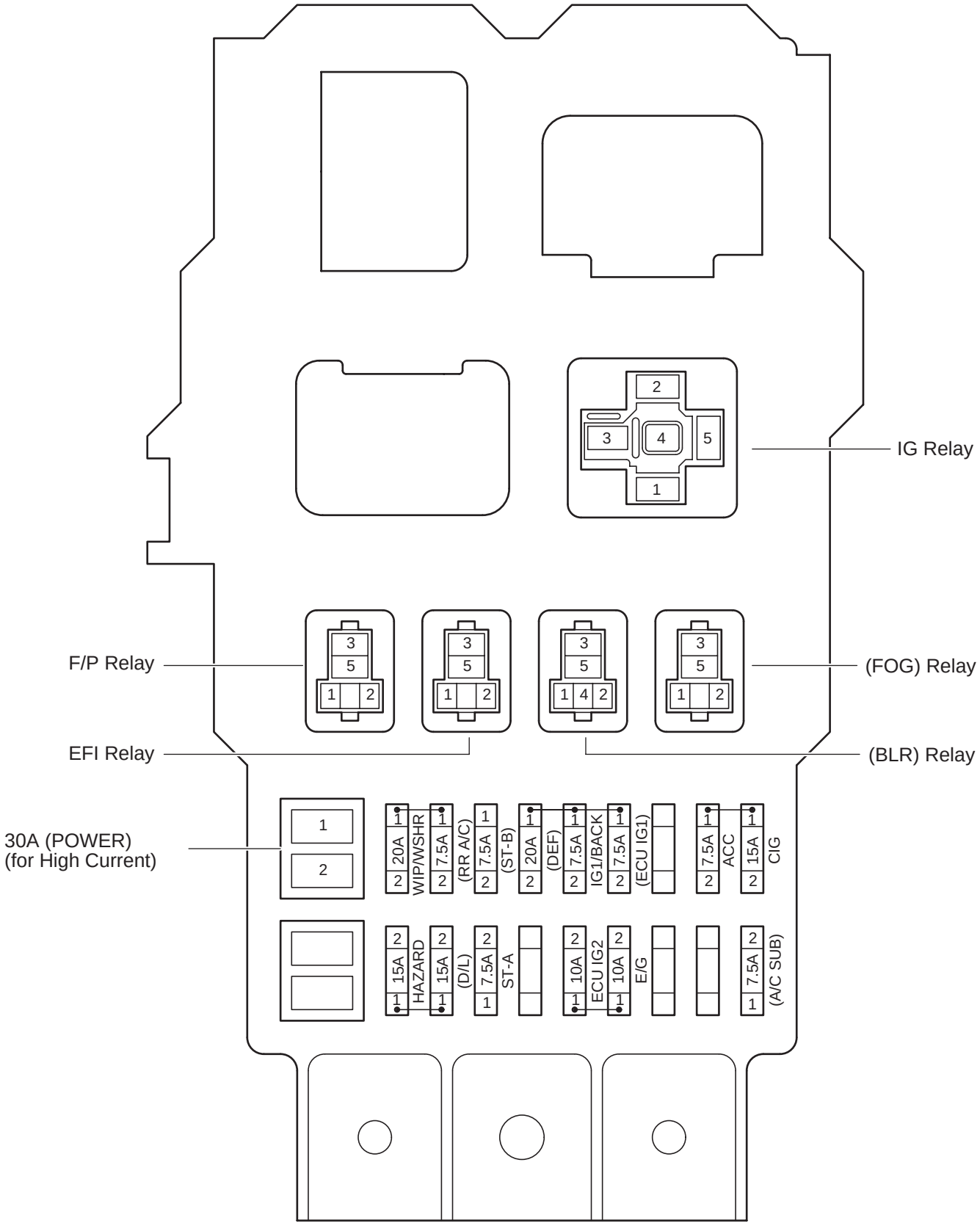
② : Fuse Block	LHD : Left Kick Panel (See Page 21)
	RHD : Right Kick Panel (See Page 21)